THE ECOSTREAM BIOFILTER™ IS A BIOFILTRATION STORMWATER TREATMENT TECHONOLOGY THAT RELIES ON PHYSICAL, CHEMICAL AND BIOLOGICAL MECHANISMS TO REMOVE TOTAL SUSPENDED SOLIDS, TOTAL PHOSPHORUS, TOTAL NITROGEN, HEAVY METALS, OIL AND GREASE, TRASH AND BACTERIA.

Model	Filter Bay Size (m)	Media Filtration Area (m^2)	Overflow to Outlet Depth (mm)	Design Treatment Rate (L/s)	Outlet Assembly Diameter (mm)
ES16B	1.2 x 1.2	1.49	813	4.2	150
ES24B	1.2 x 1.8	2.23	813	6.3	150
ES32B	1.2 x 2.4	2.97	813	8.3	150
ES36B	1.8 x 1.8	3.34	813	9.4	150
ES40B	1.2 x 3.0	3.72	813	10.4	150
ES48B	1.2 x 3.7	4.46	813	12.5	150
ES48B	1.8 x 2.4	4.46	813	12.5	150
ES60B	1.8 x 3.0	5.57	813	15.6	200
ES72B	1.8 x 3.7	6.69	813	18.7	200
ES80B	2.4 x 3.0	7.43	813	20.8	200
ES96B	2.4 x 3.7	8.92	813	25.0	250
ES112B	2.4 x 4.3	10.41	813	29.1	250
ES128B	2.4 x 4.9	11.89	813	33.3	250

[1] *A min drop of 737 mm can be used however the design engineer must review the 76 mm tailwater (up to the beehive bypass) on the inlet pipe to ensure it does not affect the project's overall design.*

NOTES:

- UNDERDRAIN SHOWN IS SCHEMATIC ONLY. FOR DETAILS ON UNDERDRAIN SIZING AND LAYOUT SEE ECOSTREAM INSTALLATION GUIDE FOR DETAILS, KIT NUMBER AND PLACEMENT OPTIONS.

ADS ECOSTREAM SPECIFICATIONS

PRODUCTS

A. INTERNAL COMPONENTS: SHALL BE SUBSTANTIALLY CONSTRUCTED OF RECYCLED POLYETHYLENE OR OTHER THERMOPLASTIC MATERIAL APPROVED BY THE MANUFACTURER

B. FILTER MEDIA: FILTER MEDIA SHALL BE BY ADS AND SHALL CONSIST OF A PROPRIETARY BLEND OF FILTER MEDIA.

C. PRECAST CONCRETE VAULT: DESIGNED FOR CL-625 TRAFFIC LOADING AND APPLICABLE SOIL LOADS OR AS OTHERWISE DETERMINED BY A LICENSED PROFESSIONAL ENGINEER. THE MATERIALS AND STRUCTURAL DESIGN OF THE DEVICES SHALL BE PER ASTM C478, ASTM C857 AND ASTM C858.

PERFORMANCE

A. THE STORMWATER FILTER SYSTEM SHALL BE AN ONLINE OR OFFLINE DESIGN BASED ON LOCAL REQUIREMENTS CAPABLE OF TREATING 100% OF THE REQUIRED TREATMENT FLOW AT FULL SEDIMENT LOAD CONDITIONS.

B. THE STORMWATER FILTER SYSTEM SHALL HAVE NO MOVING PARTS.

C. THE STORMWATER TREATMENT UNIT SHALL BE DESIGNED TO REMOVE AT LEAST 80% OF SUSPENDED SOLIDS.

ECOSTREAM INSTALLATION NOTES

INSTALLATION OF THE STORMWATER TREATMENT UNIT(S) SHALL BE PERFORMED PER MANUFACTURER'S INSTALLATION INSTRUCTIONS. SUCH INSTRUCTIONS CAN BE OBTAINED BY LOGGING ON TO WWW.ADSPIPE.COM.

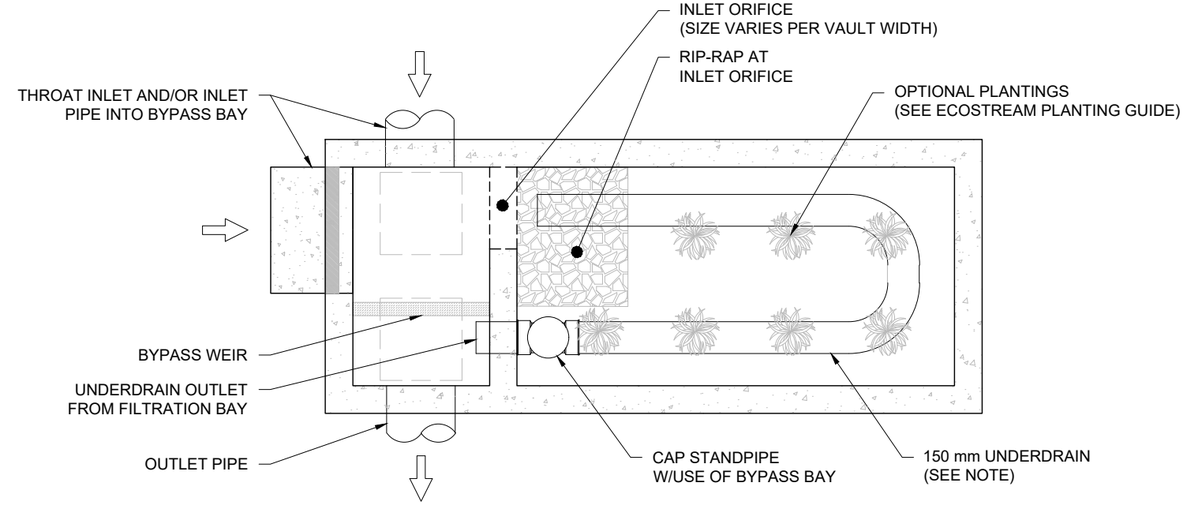

ECOSTREAM OPEN TOP PLAN VIEW

NOT TO SCALE

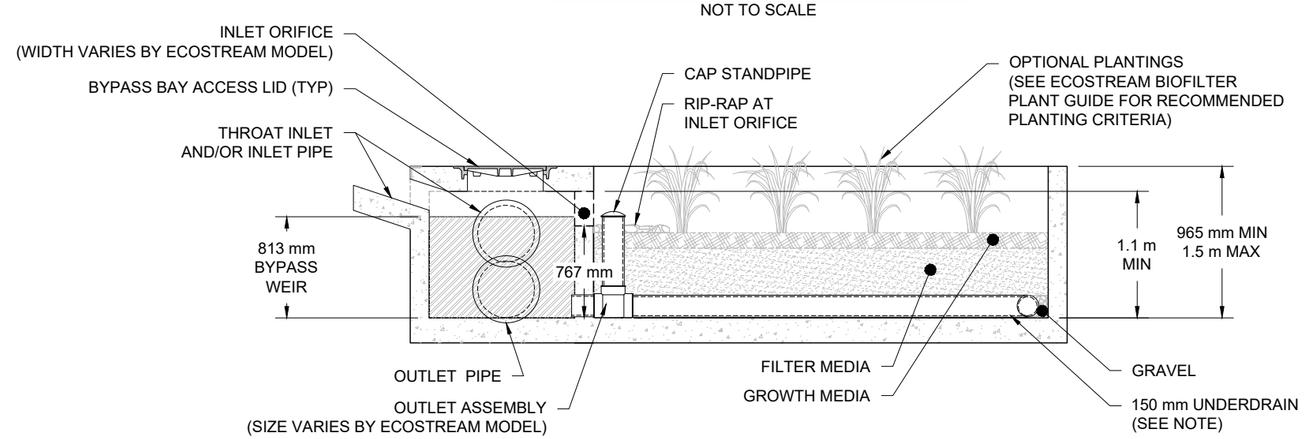

ECOSTREAM OPEN TOP PROFILE VIEW

NOT TO SCALE

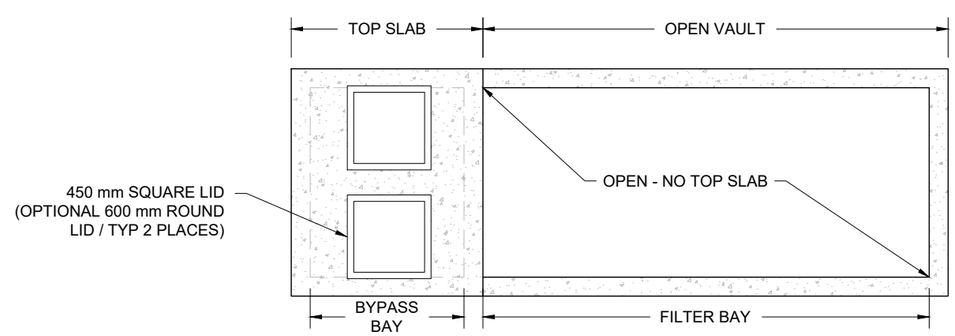

SOLID LID PLACEMENT

SIZE AND NUMBER OF SOLID LIDS VARY BY ECOSTREAM MODEL & SYSTEM DEPTH

ECOSTREAM BIOFILTER W/BYPASS
OPEN TOP INSTALLATION
BASIC MEDIA

DATE: 05/21/26 | DRAWN: JLM
DRAWING #: 570-031_C | CHECKED: TD/AT/PR

DATE	DWN	CHK

EcoStream™ Biofilter
Stormwater Media Filters

ADS
4640 TRUEMAN BLVD
HILLIARD, OH 43026

THIS DRAWING HAS BEEN PREPARED BASED ON INFORMATION PROVIDED TO ADS/STORMTECH UNDER THE DIRECTION OF THE PROJECT'S ENGINEER OF RECORD ("EOR") OR OTHER PROJECT REPRESENTATIVE. THIS DRAWING IS NOT INTENDED FOR USE IN BIDDING OR CONSTRUCTION WITHOUT THE EOR'S PRIOR APPROVAL. EOR SHALL REVIEW THIS DRAWING PRIOR TO BIDDING AND/OR CONSTRUCTION. IT IS THE ULTIMATE RESPONSIBILITY OF THE EOR TO ENSURE THAT THE PRODUCT(S) DEPICTED AND ALL ASSOCIATED DETAILS MEET ALL APPLICABLE LAWS, REGULATIONS, AND PROJECT REQUIREMENTS.