THE ECOSTREAM BIOFILTER™ IS A BIOFILTRATION STORMWATER TREATMENT TECHONOLOGY THAT RELIES ON PHYSICAL, CHEMICAL AND BIOLOGICAL MECHANISMS TO REMOVE TOTAL SUSPENDED SOLIDS, TOTAL PHOSPHORUS, TOTAL NITROGEN, HEAVY METALS, OIL AND GREASE, TRASH AND BACTERIA.

Model	Filter Bay Size (ft)	Media Filtration Area (sf)	Overflow to Outlet Depth (in)	Design Treatment Rate (cfs)	Outlet Assembly Diameter (in)	Tree Grate Size & Number
ES16B	4 x 4	16	32	0.147	6	3 ft (1x)
ES24B	4 x 6	24	32	0.221	6	3 ft (1x)
ES32B	4 x 8	32	32	0.294	6	3 ft (1x)
ES36B	6 x 6	36	32	0.331	6	4 ft (1x)
ES40B	4 x 10	40	32	0.368	6	3 ft (2x)
ES48B	4 x 12	48	32	0.441	6	3 ft (2x)
ES48B	6 x 8	48	32	0.441	6	4 ft (1x)
ES60B	6 x 10	60	32	0.551	8	4 ft (1x)
ES72B	6 x 12	72	32	0.662	8	4 ft (2x)
ES80B	8 x 10	80	32	0.735	8	4 ft (1x)
ES96B	8 x 12	96	32	0.882	10	4 ft (2x)
ES112B	8 x 14	112	32	1.029	10	4 ft (2x)
ES128B	8 x 16	128	32	1.176	10	4 ft (2x)

NOTES:

- UNDERDRAIN SHOWN IS SCHEMATIC ONLY. FOR DETAILS ON UNDERDRAIN SIZING AND LAYOUT SEE ECOSTREAM INSTALLATION GUIDE FOR DETAILS, KIT NUMBER AND PLACEMENT OPTIONS.

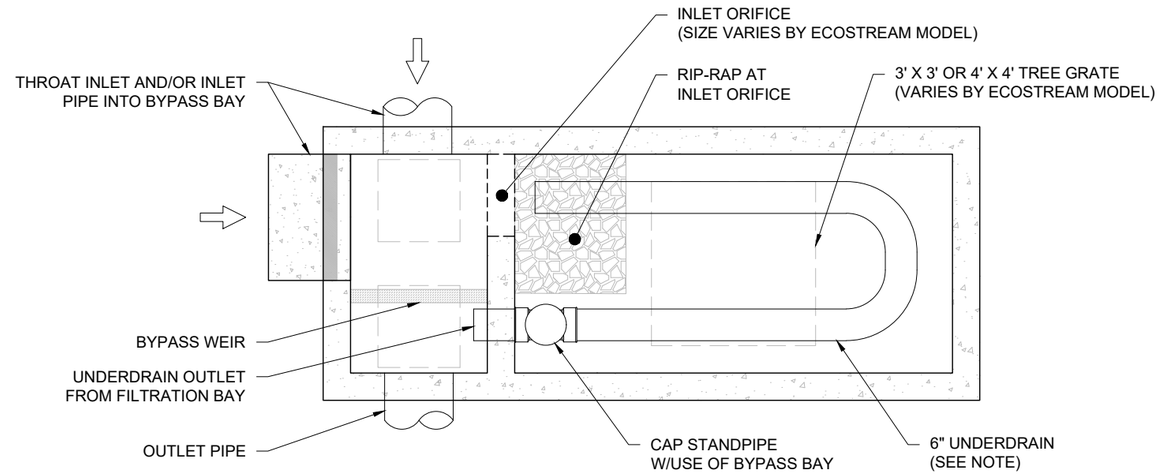

ECOSTREAM PLAN VIEW WITH TREE GRATE

NOT TO SCALE

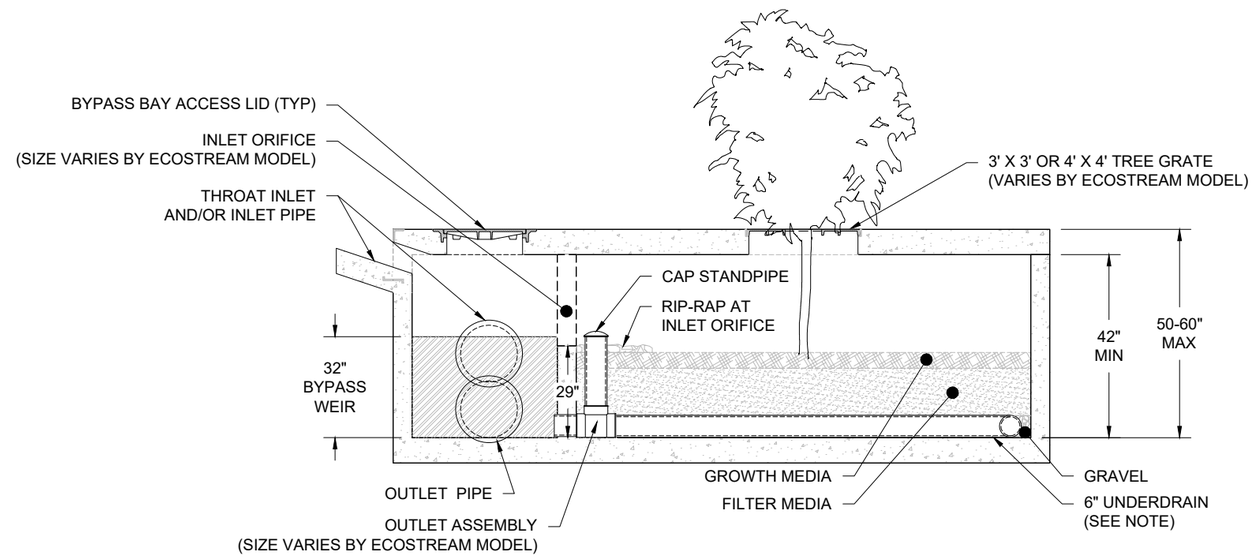

ECOSTREAM PROFILE VIEW WITH TREE GRATE

NOT TO SCALE

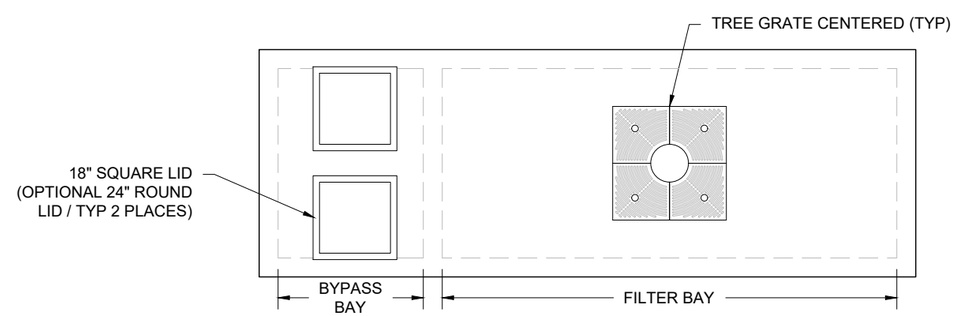

TREE GRATE PLACEMENT

SIZE AND NUMBER OF TREE GRATES VARY BY ECOSTREAM MODEL

ADS ECOSTREAM SPECIFICATIONS

PRODUCTS

A. INTERNAL COMPONENTS: SHALL BE SUBSTANTIALLY CONSTRUCTED OF RECYCLED POLYETHYLENE OR OTHER THERMOPLASTIC MATERIAL APPROVED BY THE MANUFACTURER

B. FILTER MEDIA: FILTER MEDIA SHALL BE BY ADS AND SHALL CONSIST OF A PROPRIETARY BLEND OF FILTER MEDIA.

C. PRECAST CONCRETE VAULT: DESIGNED FOR H-20 TRAFFIC LOADING AND APPLICABLE SOIL LOADS OR AS OTHERWISE DETERMINED BY A LICENSED PROFESSIONAL ENGINEER. THE MATERIALS AND STRUCTURAL DESIGN OF THE DEVICES SHALL BE PER ASTM C478, ASTM C857 AND ASTM C858.

PERFORMANCE

A. THE STORMWATER FILTER SYSTEM SHALL BE AN ONLINE OR OFFLINE DESIGN BASED ON LOCAL REQUIREMENTS CAPABLE OF TREATING 100% OF THE REQUIRED TREATMENT FLOW AT FULL SEDIMENT LOAD CONDITIONS.

B. THE STORMWATER FILTER SYSTEM SHALL HAVE NO MOVING PARTS.

C. THE STORMWATER TREATMENT UNIT SHALL BE DESIGNED TO REMOVE AT LEAST 80% OF SUSPENDED SOLIDS.

ECOSTREAM INSTALLATION NOTES

INSTALLATION OF THE STORMWATER TREATMENT UNIT(S) SHALL BE PERFORMED PER MANUFACTURER'S INSTALLATION INSTRUCTIONS. SUCH INSTRUCTIONS CAN BE OBTAINED BY CALLING ADVANCED DRAINAGE SYSTEMS AT (800) 821-6710 OR BY LOGGING ON TO WWW.ADSPIPE.COM.

ECOSTREAM BIOFILTER W/BYPASS
TREE GRATE INSTALLATION
BASIC MEDIA

DATE: 09/05/24 DRAWN: JLM
DRAWING #: 570-011 CHECKED: SMW

DATE	DWN	CHK
8/14/2025	JLM	AT

EcoStream™ Biofilter
Stormwater Media Filters

ADS
4640 TRUEMAN BLVD
HILLIARD, OH 43026

THIS DRAWING HAS BEEN PREPARED BASED ON INFORMATION PROVIDED TO ADS/STORMTECH UNDER THE DIRECTION OF THE PROJECT'S ENGINEER OF RECORD ("EOR") OR OTHER PROJECT REPRESENTATIVE. THIS DRAWING IS NOT INTENDED FOR USE IN BIDDING OR CONSTRUCTION WITHOUT THE EOR'S PRIOR APPROVAL. EOR SHALL REVIEW THIS DRAWING PRIOR TO BIDDING AND/OR CONSTRUCTION. IT IS THE ULTIMATE RESPONSIBILITY OF THE EOR TO ENSURE THAT THE PRODUCT(S) DEPICTED AND ALL ASSOCIATED DETAILS MEET ALL APPLICABLE LAWS, REGULATIONS, AND PROJECT REQUIREMENTS.