NYLOPLAST INLINE DRAIN WITH DUCTILE IRON BASE PLATE

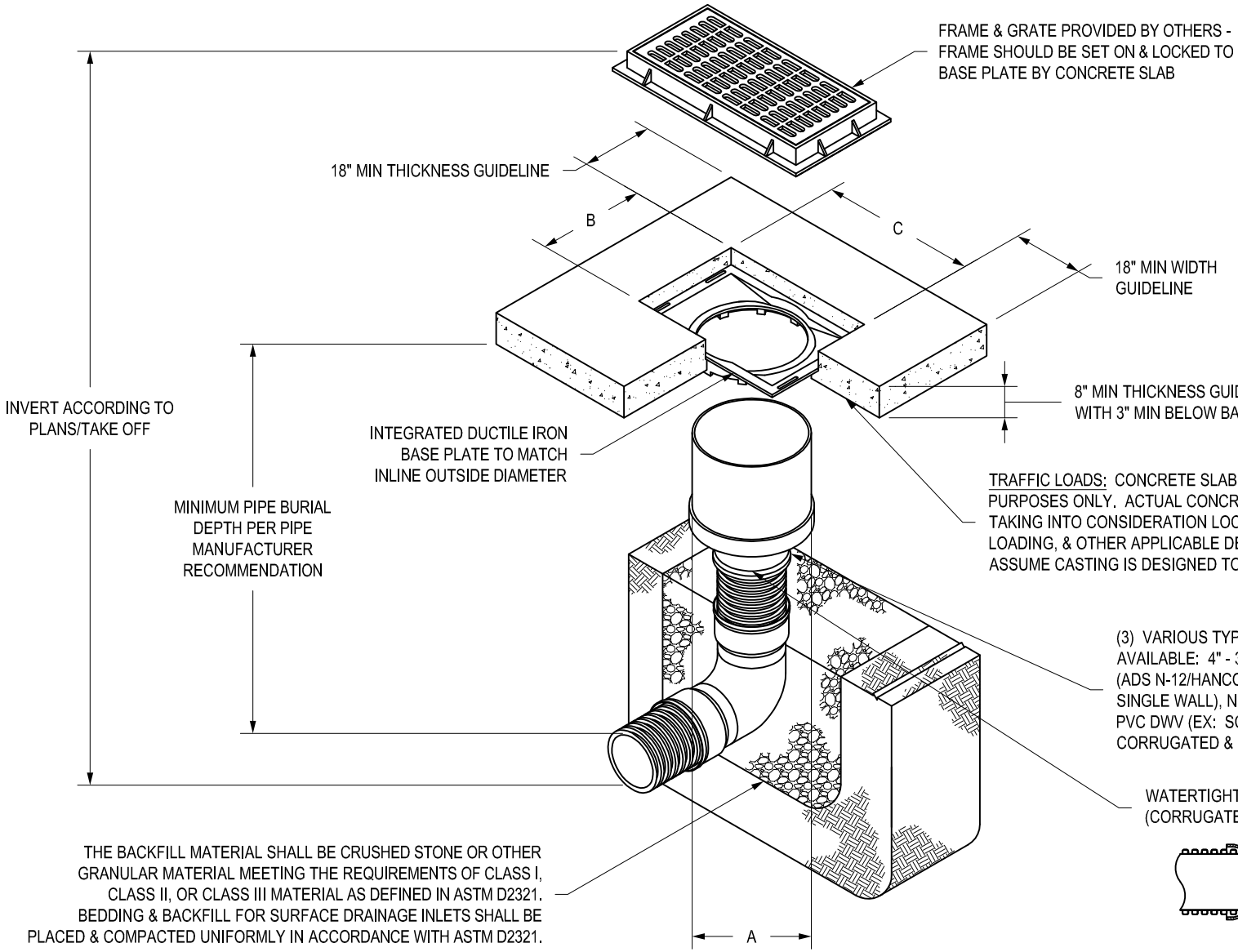

A	B	C	PART #
12" - 2' X 2'	27.25"	27.25"	12BASEG
15" - 2' X 2'	27.25"	27.25"	15BASEG
18" - 2' X 2'	27.25"	27.25"	18BASEG
24" - 2' X 2'	27.25"	27.25"	24BASEG
30" - 2' X 2'	36.00"	36.00"	30BASEG

A	B	C	PART #
18" - 2' X 3'	27.25"	39.25"	18BASER
24" - 2' X 3'	27.25"	39.25"	24BASER
30" - 2' X 3'	36.00"	39.25"	30BASER

1 - BASE PLATES SHALL BE DUCTILE IRON PER ASTM A536 GRADE 70-50-05.
2 - DRAINAGE CONNECTION STUB JOINT TIGHTNESS SHALL CONFORM TO ASTM D3212 FOR CORRUGATED HDPE (ADS N-12/HANCOR DUAL WALL), N-12 HP, & PVC SEWER (4" - 24").
3 - "B" & "C" REFERENCE THE DIMENSIONS OF THE UPPER FLANGE OF THE BASE PLATE.

THIS PRINT DISCLOSES SUBJECT MATTER IN WHICH NYLOPLAST HAS PROPRIETARY RIGHTS. THE RECEIPT OR POSSESSION OF THIS PRINT DOES NOT CONFER, TRANSFER, OR LICENSE THE USE OF THE DESIGN OR TECHNICAL INFORMATION SHOWN HEREIN REPRODUCTION OF THIS PRINT OR ANY INFORMATION CONTAINED HEREIN, OR MANUFACTURE OF ANY ARTICLE HEREFROM, FOR THE DISCLOSURE TO OTHERS IS FORBIDDEN, EXCEPT BY SPECIFIC WRITTEN PERMISSION FROM NYLOPLAST.
©2013 NYLOPLAST

DRAWN BY EBC	MATERIAL	ADS Nyloplast	3130 VERONA AVE BUFORD, GA 30518 PHN (770) 932-2443 FAX (770) 932-2490 www.nyloplast-us.com
DATE 9-29-09			
REVISED BY NMH	PROJECT NO./NAME	TITLE INLINE DRAIN WITH DUCTILE IRON BASE PLATE & FRAME & GRATE PROVIDED BY OTHERS	
DATE 03-16-16			
DWG SIZE A	SCALE 1:40 SHEET 1 OF 1	DWG NO. 7003-110-052	REV D