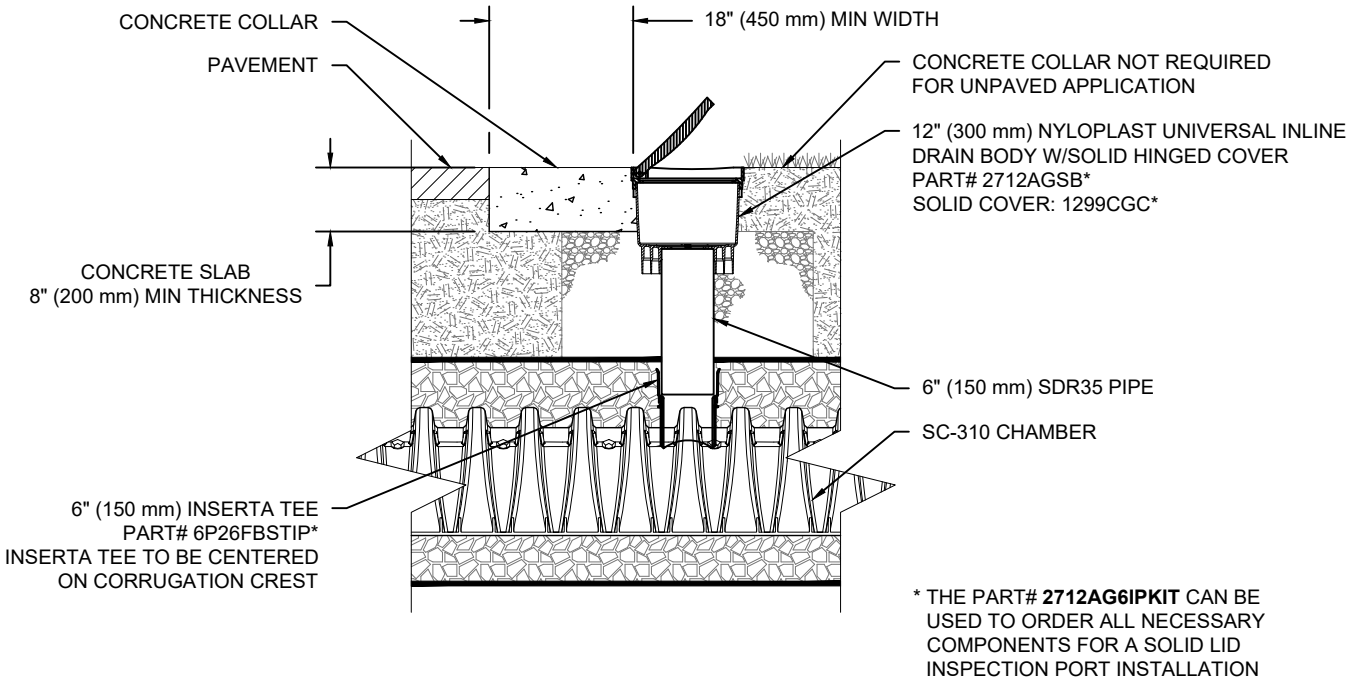

SC-310 6" (150 mm) INSPECTION PORT DETAIL

NTS