RMS RAINWATER HARVESTING TANK INSTALLATION DETAIL

NTS

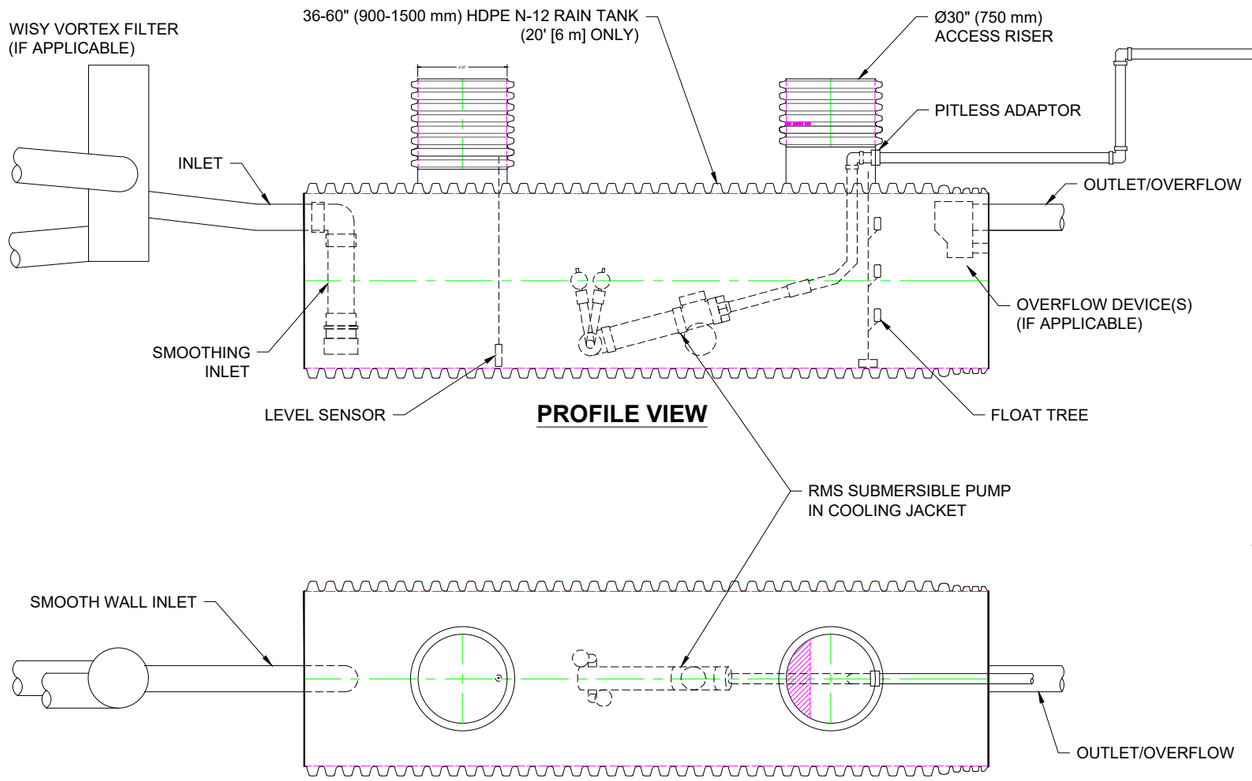

PROFILE VIEW

PLAN VIEW

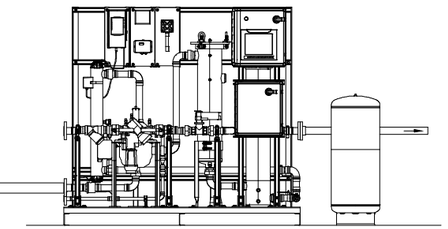

RMS FILTRATION SKID

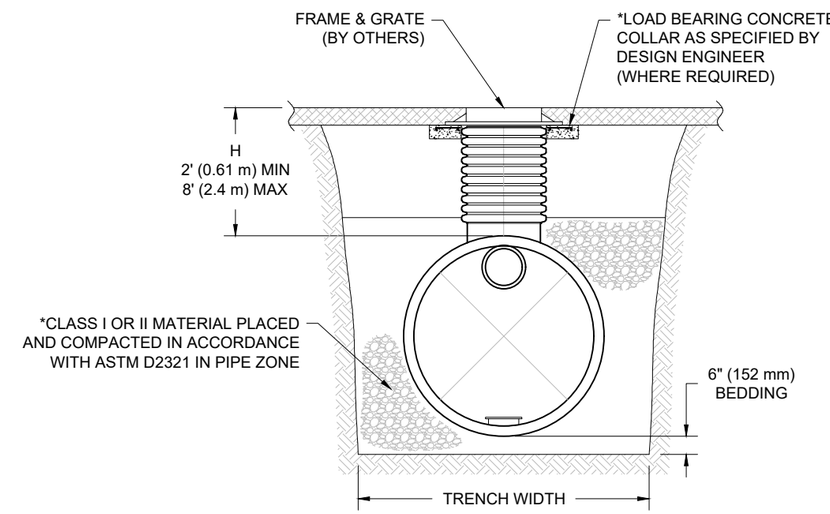

CROSS-SECTION VIEW

RECOMMENDED MINIMUM TRENCH WIDTHS	
TANK DIAM.	MIN. TRENCH WIDTH
36" (900 mm)	64" (1625 mm)
48" (1200 mm)	80" (2032 mm)
60" (1500 mm)	96" (2438 mm)

NOTES:

1. ALL REFERENCES TO CLASS I OR II MATERIAL ARE PER ASTM D2321 "STANDARD PRACTICE FOR UNDERGROUND INSTALLATION OF THERMOPLASTIC PIPE FOR SEWERS AND OTHER GRAVITY FLOW APPLICATIONS", LATEST EDITION.
2. ALL RAINWATER HARVESTING TANK SYSTEMS SHALL BE INSTALLED IN ACCORDANCE WITH ASTM D2321, LATEST EDITION AND THE MANUFACTURER'S PUBLISHED INSTALLATION GUIDELINES.
3. MEASURES SHOULD BE TAKEN TO PREVENT THE MIGRATION OF NATIVE FINES INTO THE BACKFILL MATERIAL, WHEN REQUIRED. SEE ASTM D2321.
4. FILTER FABRIC: A GEOTEXTILE FABRIC MAY BE USED AS SPECIFIED BY THE ENGINEER TO PREVENT THE MIGRATION OF FINES FROM THE NATIVE SOIL INTO THE SELECT BACKFILL MATERIAL.
5. FOUNDATION: WHERE THE TRENCH BOTTOM IS UNSTABLE, THE CONTRACTOR SHALL EXCAVATE TO A DEPTH REQUIRED BY THE ENGINEER AND REPLACE WITH SUITABLE MATERIAL AS SPECIFIED BY THE ENGINEER. AS AN ALTERNATIVE AND AT THE DISCRETION OF THE DESIGN ENGINEER, THE TRENCH BOTTOM MAY BE STABILIZED USING A GEOTEXTILE MATERIAL.
6. BEDDING: SUITABLE MATERIAL SHALL BE CLASS I OR II. THE CONTRACTOR SHALL PROVIDE DOCUMENTATION FOR MATERIAL SPECIFICATION TO ENGINEER. UNLESS OTHERWISE NOTED BY THE ENGINEER, MINIMUM BEDDING THICKNESS SHALL BE 6" (152 mm) FOR 36-60" (900-1500 mm) DIAMETER RAINWATER HARVESTING TANKS.
7. INITIAL BACKFILL: SUITABLE MATERIAL SHALL BE CLASS I OR II IN THE PIPE ZONE EXTENDING NOT LESS THAN 6" (152 mm) ABOVE CROWN OF PIPE. THE CONTRACTOR SHALL PROVIDE DOCUMENTATION FOR MATERIAL SPECIFICATION TO ENGINEER. MATERIAL SHALL BE INSTALLED AS REQUIRED IN ASTM D2321, LATEST EDITION.
8. MINIMUM COVER: MINIMUM COVER OVER ALL RAINWATER HARVESTING TANKS IN NON-TRAFFIC APPLICATIONS (GRASS OR LANDSCAPE AREAS) IS 12" (305 mm) FROM TOP OF PIPE TO GROUND SURFACE. ADDITIONAL COVER MAY BE REQUIRED TO PREVENT FLOATATION. FOR TRAFFIC APPLICATIONS, MINIMUM COVER IS 24" (610 mm) FOR 36-60" (900-1500 mm) DIAMETER RAINWATER HARVESTING TANKS, AS MEASURED FROM TOP OF PIPE TO BOTTOM OF FLEXIBLE PAVEMENT OR TO TOP OF RIGID PAVEMENT.
9. PIPE CONNECTIONS: PIPE CONNECTIONS TO RAINWATER HARVESTING TANK SHALL BE MADE WITH SMOOTH WALL WELDED STUBS. INLET AND BYPASS OUTLET PIPE SHALL BE HDPE OR PVC PIPE AS SPECIFIED.
10. PUMP AND ACCESSORIES: PUMP AND PLUMBING ACCESSORIES SHALL BE SPECIFIED BY THE DESIGN ENGINEER AND SUPPLIED BY OTHERS. PUMP AND PLUMBING ACCESS SHALL BE THROUGH THE 24" (600 mm) RISER.
11. PERFORMANCE TESTING: IN LIEU OF AN ENGINEER'S WRITTEN SPECIFICATION, THE INTEGRITY OF THE RAIN TANK MAY BE TESTED IN ACCORDANCE WITH ASTM F2487, WITH THE EXCEPTION THAT THE TANK MAY NOT BE FILLED PAST THE INVERT OF THE BY-PASS OUTLET PIPE. A MAXIMUM ALLOWABLE LEAKAGE ALLOWANCE OF 0.22 GALLONS/FT-DIA/FT-PIPE/24-HOUR MAY BE APPLIED TO THE HP TANK IN LIEU OF WRITTEN SPECIFICATIONS. PERFORMANCE NOT MEETING THE REQUIREMENTS OF THIS OR THE THE ENGINEER'S WRITTEN SPECIFICATION SHALL BE REMEDIED BY THE INSTALLER OR OTHER PARTY. APPROPRIATE SAFETY PRECAUTIONS MUST BE USED WHEN FIELD TESTING ANY PIPE MATERIAL.

RAINWATER HARVESTING
SINGLE PIECE TANK
RMS

DATE: 01/09/2026 DRAWN: SMW
DRAWING #: 720-710 CHECKED:

DATE	DWN	CHK

RMS™ RAINWATER MANAGEMENT SOLUTIONS

ADS 4640 TRUEMAN BLVD HILLIARD, OH 43026

THIS DRAWING HAS BEEN PREPARED BASED ON INFORMATION PROVIDED TO ADS/STORMTECH UNDER THE DIRECTION OF THE PROJECT'S ENGINEER OF RECORD ("EOR") OR OTHER PROJECT REPRESENTATIVE. THIS DRAWING IS NOT INTENDED FOR USE IN BIDDING OR CONSTRUCTION WITHOUT THE EOR'S PRIOR APPROVAL. EOR SHALL REVIEW THIS DRAWING PRIOR TO BIDDING AND/OR CONSTRUCTION. IT IS THE ULTIMATE RESPONSIBILITY OF THE EOR TO ENSURE THAT THE PRODUCT(S) DEPICTED AND ALL ASSOCIATED DETAILS MEET ALL APPLICABLE LAWS, REGULATIONS, AND PROJECT REQUIREMENTS.