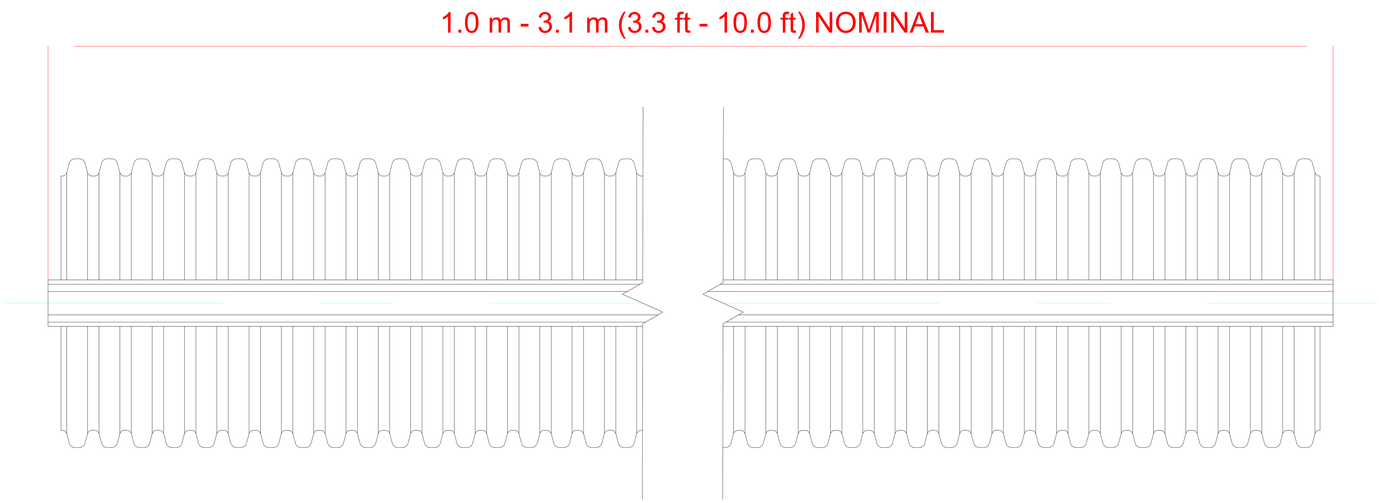


PLAN VIEW

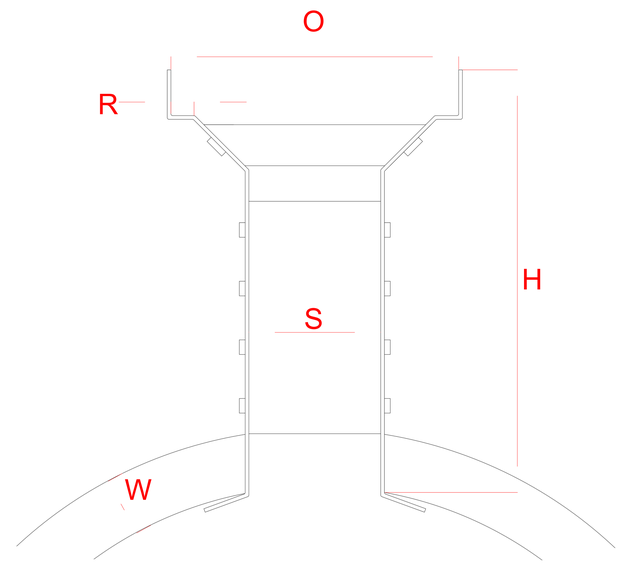


CROSS SECTION

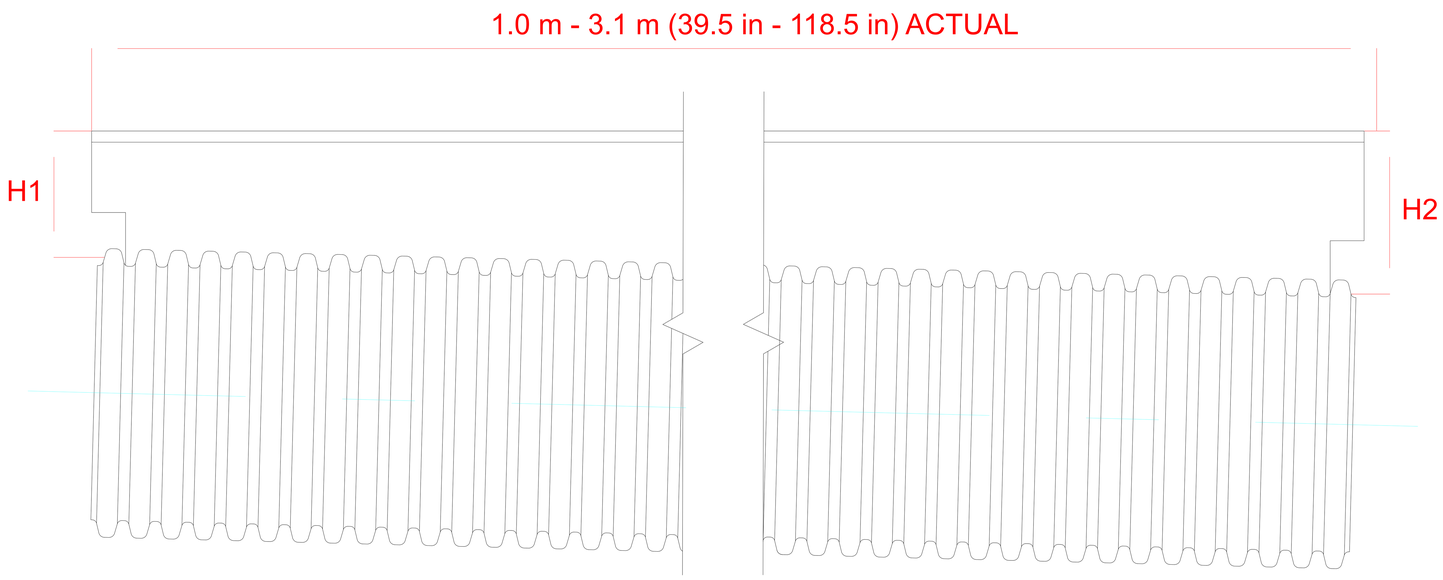


PROFILE VIEW

| PIPE Ø, mm (in) | H1-H2, mm (in) | W, mm (in) | O, mm (in) | S, mm (in) | R, mm (in) | PRODUCT # |
|---|---|---|---|---|---|---|
| 6 (150) | 76 - 610 (3.00 - 24.00) | 13 (0.46) | 127 (5.00) | 57 (2.25) | 8 (0.32) | 0690DSXL |
| 8 (200) | 76 - 610 (3.00 - 24.00) | 15 (0.61) | | | | 0890DSXL |
| 10 (250) | 76 - 610 (3.00 - 24.00) | 19 (0.73) | | | | 1090DSXL |
| 12 (300) | 89 - 610 (3.50 - 24.00) | 29 (1.15) | | | | 1290DSXL |
| 12 (300) | 610 - 914 (24.01 - 36.00) | | | | | 1290DSDTXL |
| 15 (375) | 95 - 609 (3.75 - 24.00) | 33 (1.30) | | | | 1590DSXL |
| 15 (375) | 610 - 914 (24.01 - 36.00) | | | | | 1590DSDTXL |
| 18 (450) | 102 - 609 (4.00 - 24.00) | 40 (1.57) | | | | 1890DSXL |
| 18 (450) | 610 - 914 (24.01 - 36.00) | | | | | 1890DSDTXL |
| 24 (600) | 121 - 609 (4.25 - 24.00) | 47 (1.86) | | | | 2490DSXL |
| 24 (600) | 610 - 914 (24.01 - 36.00) | | | | | 2490DSDTXL |
| 30 (750) | 127 - 609 (5.00 - 24.00) | 65 (2.55) | | | | 3090DSXL |
| 30 (750) | 610 - 914 (24.01 - 36.00) | | | | | 3090DSDTXL |
| 36 (900) | 133 - 609 (5.25 - 24.00 ) | 72 (2.85) | | | | 3690DSXL |
| 36 (900) | 610 - 914 (24.01 - 36.00) | | | | | 3690DSDTXL |

## NOTES:

1. SEE GRATING DETAILS FOR SURFACE TREATMENT OPTIONS
2. H1 AND H2 VARY BASED ON PROJECT SPECIFICATIONS AND MAY NOT RESEMBLE THE IMAGES SHOWN ABOVE.
3. ALL DIMENSIONS ARE FOR REFERENCE ONLY.

| REV. | DESCRIPTION | BY | MM/DD/YY | CHK'D |
|---|---|---|---|---|
| 0 | - | - | - | - |

© 2024 ADS, INC.

ADVANCED DRAINAGE SYSTEMS, INC. ("ADS") HAS PREPARED THIS DETAIL BASED ON INFORMATION PROVIDED TO ADS. THIS DRAWING IS INTENDED TO DEPICT THE COMPONENTS AS REQUESTED. ADS HAS NOT PERFORMED ANY ENGINEERING OR DESIGN SERVICES FOR THIS PROJECT, NOR HAS ADS INDEPENDENTLY VERIFIED THE INFORMATION SUPPLIED. THE INSTALLATION DETAILS PROVIDED HEREIN ARE GENERAL RECOMMENDATIONS AND ARE NOT SPECIFIC FOR THIS PROJECT. THE DESIGN ENGINEER SHALL REVIEW THESE DETAILS PRIOR TO CONSTRUCTION. IT IS THE DESIGN ENGINEERS RESPONSIBILITY TO ENSURE THE DETAILS PROVIDED HEREIN MEETS OR EXCEEDS THE APPLICABLE NATIONAL, STATE, OR LOCAL REQUIREMENTS AND TO ENSURE THAT THE DETAILS PROVIDED HEREIN ARE ACCEPTABLE FOR THIS PROJECT.

[redacted]

Duraslot XL Pipe
Custom Slot Height

DRAWING NUMBER: STD-1401B_C

ADS
Advanced Drainage Systems, Inc.

4640 TRUEMAN BLVD
HILLIARD, OHIO 43026

[redacted]

DRAWN BY: KJS
DATE: 2024-09-30
CK'D BY: -
SCALE: NTS
SHEET: 1 OF 1

!GENTITLE-INSERT